VSR - Analogline Vacuum Transducer Piezo / Pirani

Absolute Pressure 2000 to 5.0 x 10^{-5} mbar

ANALOGLINE

Overview VSR vacuum transducer

- Combination sensor Piezo / Pirani with extended measuring range 5.0e-5 mbar
- High accuracy over the entire measuring range including rough vacuum
- Excellent reproducibility and reliability for stable production processes
- Overpressure stability up to 10 bar
- Optical status display by LED
- Measurement independent of gas type in low vacuum
- Fast response time of up to 18 ms enable shorter clock cycles
- Integrated metal facing for protection against contamination
- UHV suitable due to metal sealed stainless steel measuring cell (He leakage rate <5e-10 mbar l/s)

Overview Analogline vacuum transducers

- Stable, reproducible measurement values due to microprocessor controller and individual temperature compensation
- Precise, digital adjustment to zero pressure and atmosphere at the push of a button. The vacuum transducer automatically recognizes the adjustment point
- Functionalities of the Analogline are reduced to minimum to achieve an optimal cost-performance-ratio
- Robust metal housings and plugs with protection class IP54 (4-20 mA versions) or IP40 (0-10 V versions), ideal for rugged industry environments
- Compact construction, ideal for industrial applications with reduced space
- Linear and logarithmic output signal of the transducer (optionally 4-20 mA or 0-10 V) can easily read out with a system control (PLC)

VSR - Analogline Vacuum Transducer Piezo / Pirani

Absolute Pressure 2000 to 5.0 x 10^{-5} mbar

Technical Data

Measurement Principle	Piezo resistive/heat conduction Pirani (Pirani depending on gas type)
Measurement Range	2000 – 5e-5 mbar (1500 – 5e-5 Torr)
Materials with Vac. Contact	Stainless steel 1.4307, tungsten, nickel, glass, silicon oxide, epoxy, Polyimide, SnAg
Max. Overload	10 bar abs.
Accuracy	2000 – 200 mbar: <2 % f. r. 200 – 40 mbar: <5 % f. r., 40 – 2e-3 mbar: <10 % f. r.
Repeatability	2000 – 40 mbar: 0.1 % f. s., 40 – 1e-2 mbar: 2 % f. r.
Reaction Time	<18 ms
Voltage Supply	12–30 VDC
Electrical Connection	M12 A, 5pole, male, lockable (VSR53MA4) Hirschmann, 6pole, male, lockable (VSR53MV, VSR54MV)
Power Consumption	1 W
Operating Temperature	+5...+60 °C
Storage Temperature	-40...+65 °C
Bake Out Temperature	Max. 125 °C at the flange (tranducer separated from voltage supply)
Output Signal	0-10 V, 4-20 mA
Vacuum Connection	DN 16 CF-F (VSR54MV), DN 16 ISO-KF (VSR53MA4, VSR53MV)
Protection Class	IP40 (VSR53MV, VSR54MV), IP54 (VSR53MA4)
Weight	Approx. 100 g (VSR53MV)

VSR - Analogline Vacuum Transducer Piezo / Pirani

Absolute Pressure 2000 to 5.0 x 10^{-5} mbar

Dimensions in mm

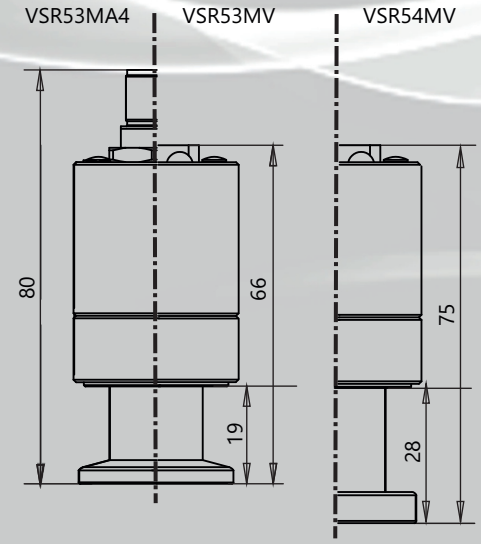

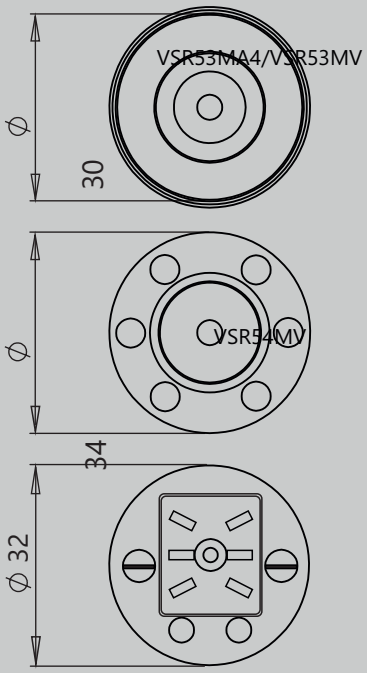

Model designations

- VSR53MV DN 16 ISO-KF connection, output 0-10 V
- VSR54MV DN 16 CF connection, output 0-10 V
- VSR53MA4 DN 16 ISO-KF connection, output 4-20 mA

Accessories

- XB0600002 Mating plug, 6pole, for VSR53MV/VSR54MV
- XB0500004 Mating plug, 5pole, for VSR53MA4

Further accessories as well as detailed information about our product family can be found in our Smartline brochure.